FORMAX®

Atlas C150 Automatic Programmable Creaser

Atlas C350 Automatic Programmable Creaser/Folder

10/2021

UNPACKING & INSTALLATION MANUAL

⚠ **WARNING:**

This is a Class A product. In a domestic environment this product may cause radio interference in which case the user may be required to take adequate measures.

The product (System) which is connected to this machine will be class A

NOTE

The domestic environment is an environment where the use of broadcast radio and television recievers may be expected within a distance of 10 m of the apparatus concerned.

Introduction

Please read the Safety Information before using this machine. It contains information related to USER SAFETY and PREVENTING EQUIPMENT PROBLEMS.

How to read this manual

Notation conventions

Whenever necessary, the following points for attention are indicated in this manual.

⚠ **WARNING:**
Indicates a potentially hazardous situation which, if instructions are not followed, could result in death or serious injury.

⚠ **CAUTION:**
Indicates a potentiality hazardous situation which, if instructions are not followed, may result in minor or moderate injury or damage to machine or property.

NOTE
This sign refers to:
Remarks for making the operation much easier. You get practical hints or knowledge to assist you in the machine operation such as:
Preparations required before operating
How to prevent papers from being misfed or damaged
Precautions required or actions to take after miss-operation
Limitations like numerical limits, functions that cannot be used together or conditions, under which a particular function cannot be used or obtained.
Information.
[ ]
Keys that appear on the machine's display panel.

Safety Information

When using this machine, following safety precautions should always be followed.

Safety during operation

⚠ WARNING:

- **To avoid hazardous situations like for instance electric shock or danger while exposed to moving, rotating or cutting devices, do not remove any covers, guards or screws other than those specified in this manual.**
- **Turn off the power and disconnect the power plug (by pulling the plug, not the cable) if any of the following conditions exists:**
  - **Before disassembling or assembling parts of the System and peripherals.**
  - **You drop objects or spill something into the equipment.**
  - **You suspect that your equipment needs service or repair.**
  - **Your equipment's covers has been damaged.**
  - **You notice unusual noises or odours when operating the equipment.**
  - **If the power cable or plug becomes worn out or otherwise damaged.**
  - **Before cleaning and care (unless otherwise specifically instructed).**
- **If any adjustment or operation check has to made with exterior covers off or open while the main switch is turned on, keep hand away from electrical or mechanically driven components.**
- **Note that components of the System and peripherals can be supplied with electric voltage even if the mail power switch is turned off and the power cord is disconnected.**
- **Electromagnetic compliance:**
  - **This is a Class A product. In a domestic environment this product may cause radio interference in which case the user may be required to take adequate measures.**
  - **The product (System) which is connected to this machine will be class A.**

⚠ **WARNING:**

- **Always connect the equipment to a properly grounded power source (wall outlet). Wall outlet should be located near the system and easily accessible. If in doubt, have the power source checked by a qualified electrician.**
- **Improper grounding of the equipment can result in electrical shock. Never connect the machine to a power source that lacks a ground connection terminal. This machine is destined for specific purpose only. Any use going beyond this specific purpose is regarded as beyond the determination. The manufacturer will not be liable for damages resulting from any use beyond the determination, unallowed operation, respectively. The user alone bears the risk.**
- **Do not make arbitrary changes or modifications to the machine. The manufacturer will not be liable for modifications made at the machine on your own and damages resulting thereof. EC declaration of conformity and the mark CE will be invalidated, if you make changes at the machine or at the individual components.**
- **Do not override or bypass electrical or mechanical interlock devices.**
- **The machine is to be used only by authorized and instructed persons. The responsibilities on operating the machine have to be strictly laid down and observed so that there are no unclear competences regarding safety aspects.**
- **Vent holes serve for air circulation to protect the machine from overheating. Make sure that the holes are not covered.**
- **Do not expose fingers or other parts of the body to moving, rotating or cutting devices such as for instance between upper and lower trimmer knives.**
- **Allways locate the equipment on a solid support surface with adequate strength tor the weight of the machine.**

1 Unpack and Installation

1.0 Unpacking Instruction

⚠ **WARNING!**
Two people are required to pack/unpack the Atlas C150/C350. Only qualified/trained personnel should perform the procedures described in this document.

1. Cut packaging straps [A] and remove top cover [B] of box.

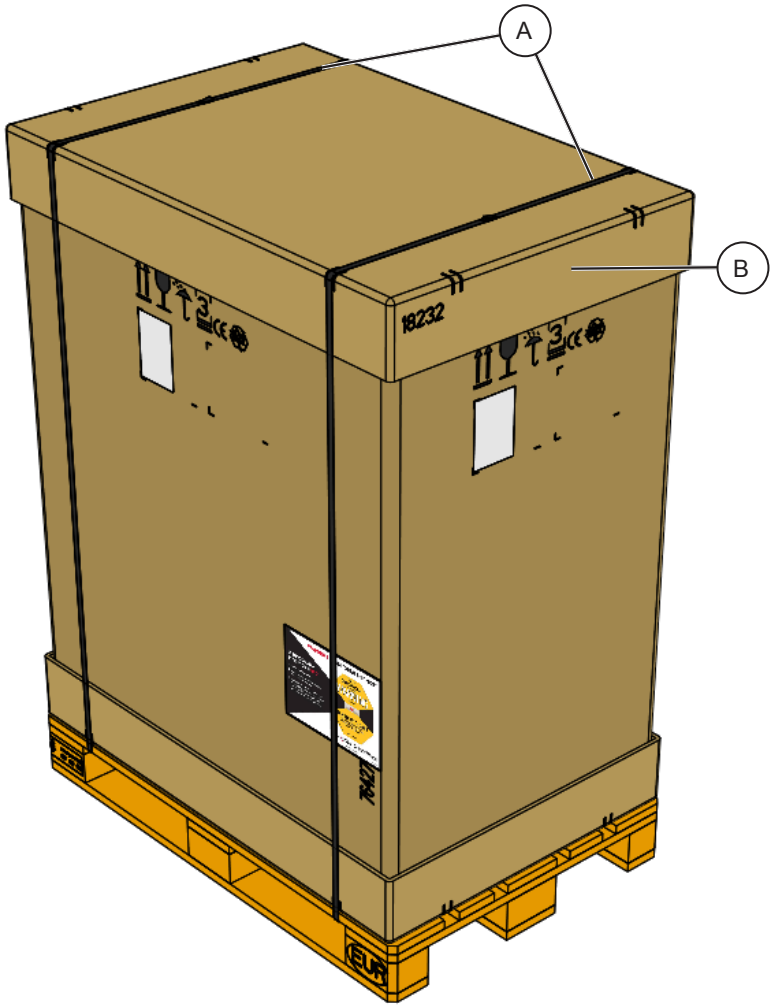

2. Remove components [C] placed on top of unit and then ramp [D].

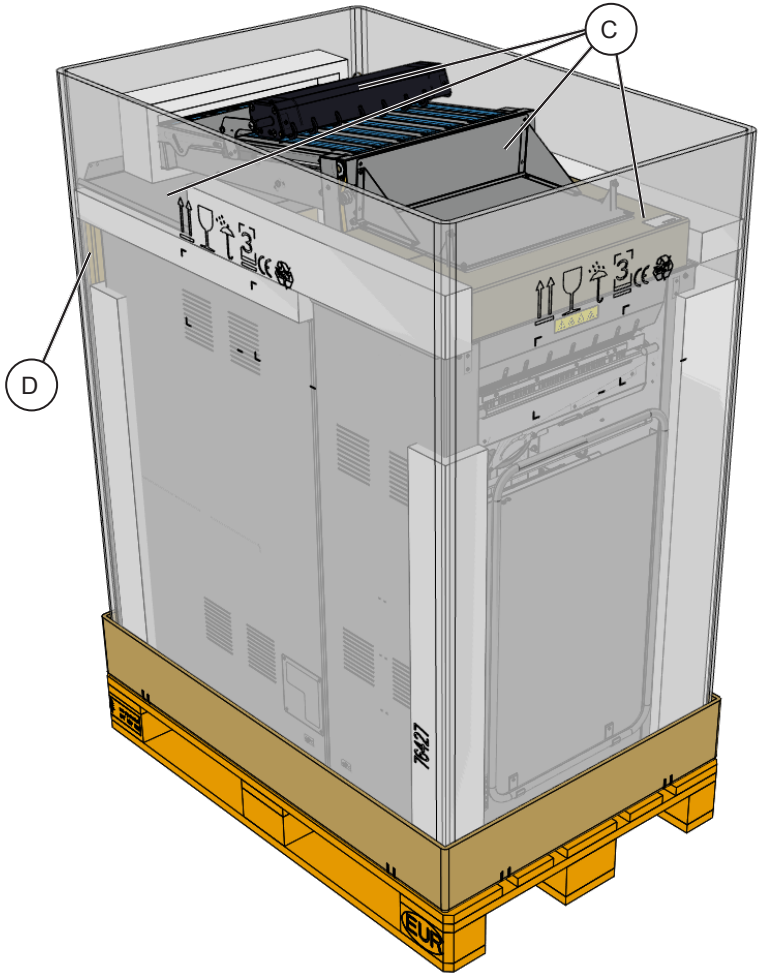

NOTE: Box transparent for clarity.

[3] Remove outer cardboard box [E], plastic wrap [F] and protection foam [G].

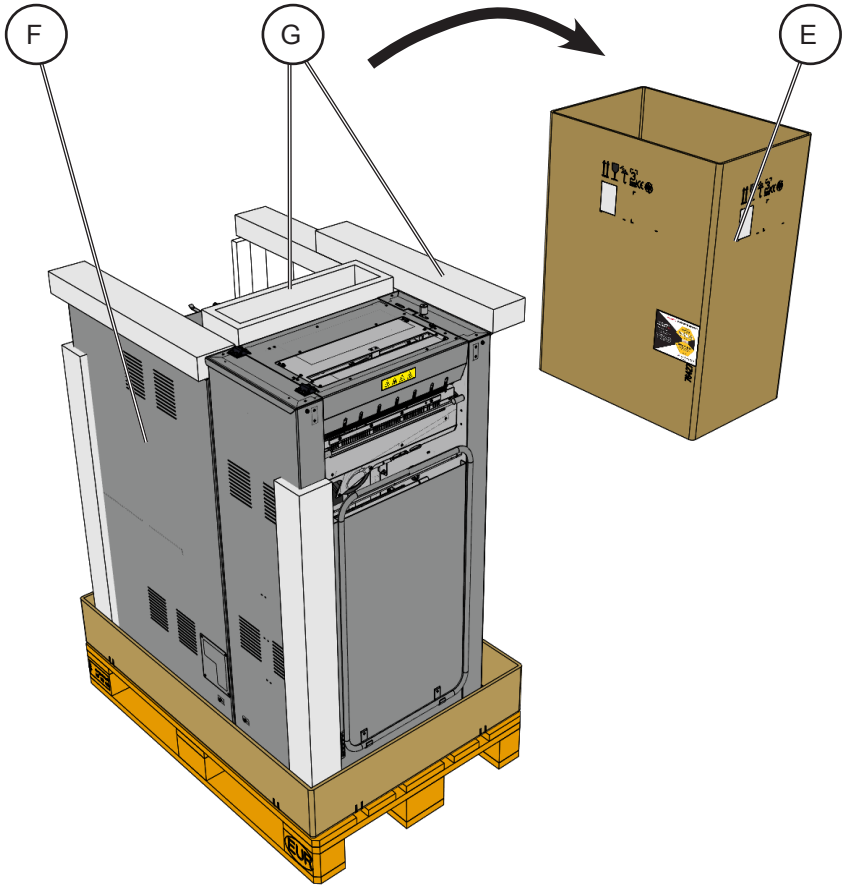

[4] Fold down cardboard box base [H] & place ramp supports [K] under pallet.

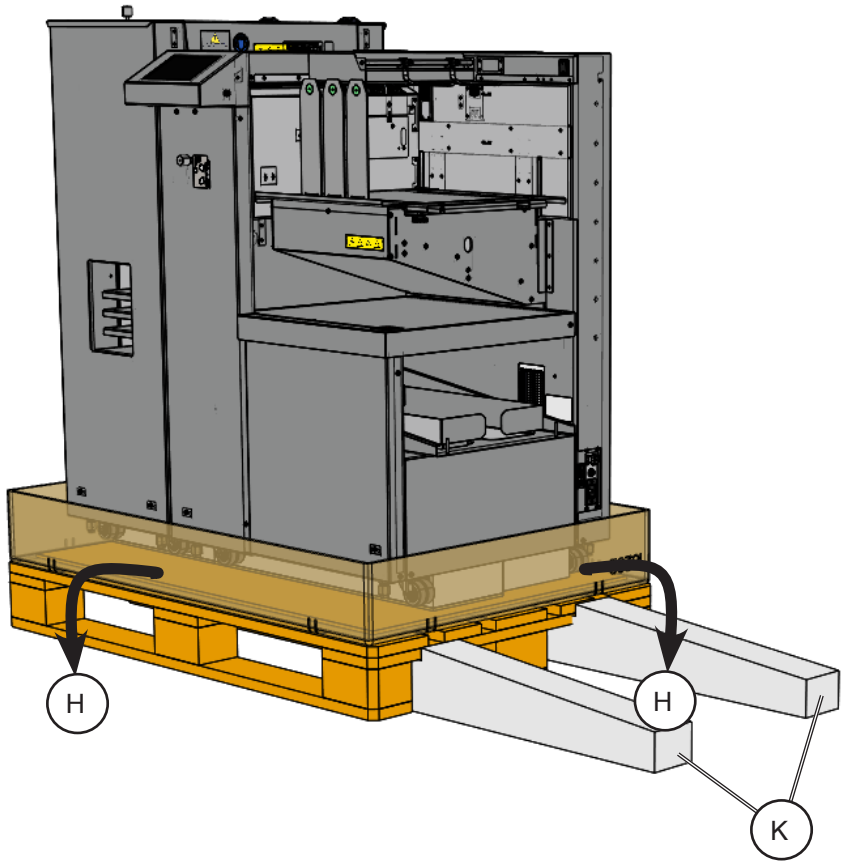

[5] Place ramp [D] onto supports [K].

⚠ **WARNING!**
Two people are required to carefully roll down the Atlas C150/C350.

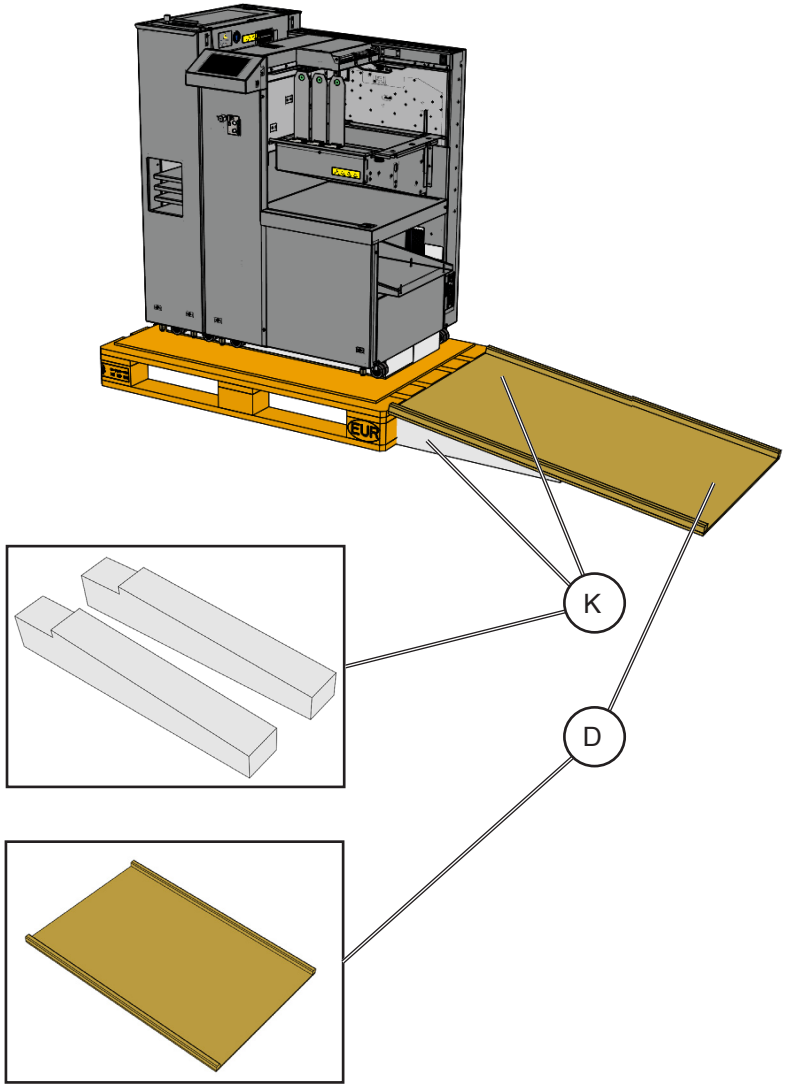

[6] Lower the feet [L] (x8) to raise machine. Remove Foam supports [M] (x4) from under machine. Raise Feet [L] (x8) so the machine is resting on the wheels.

NOTE: Cardboard base removed for clarity.

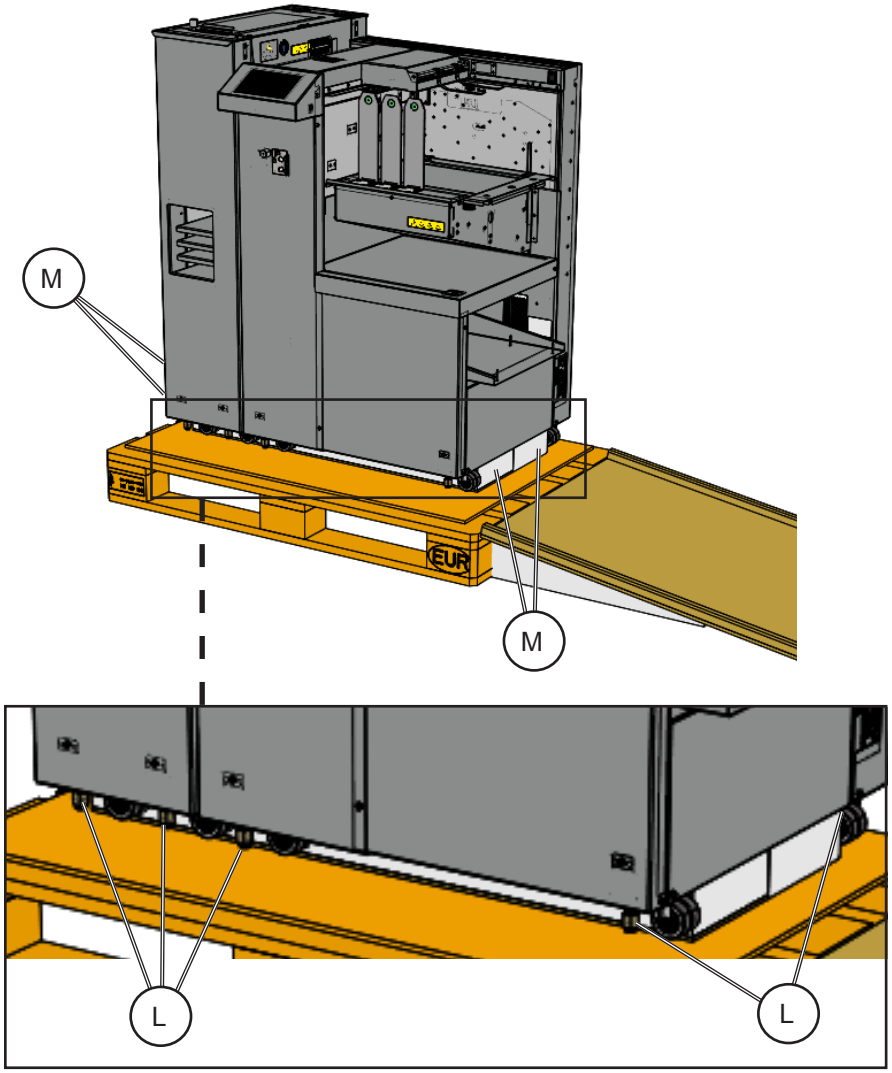

[7] Carefully roll unit down the Ramp. Position the unit in the desired location.

⚠ **WARNING!**
Two people are required to carefully roll down the Atlas C150/C350.

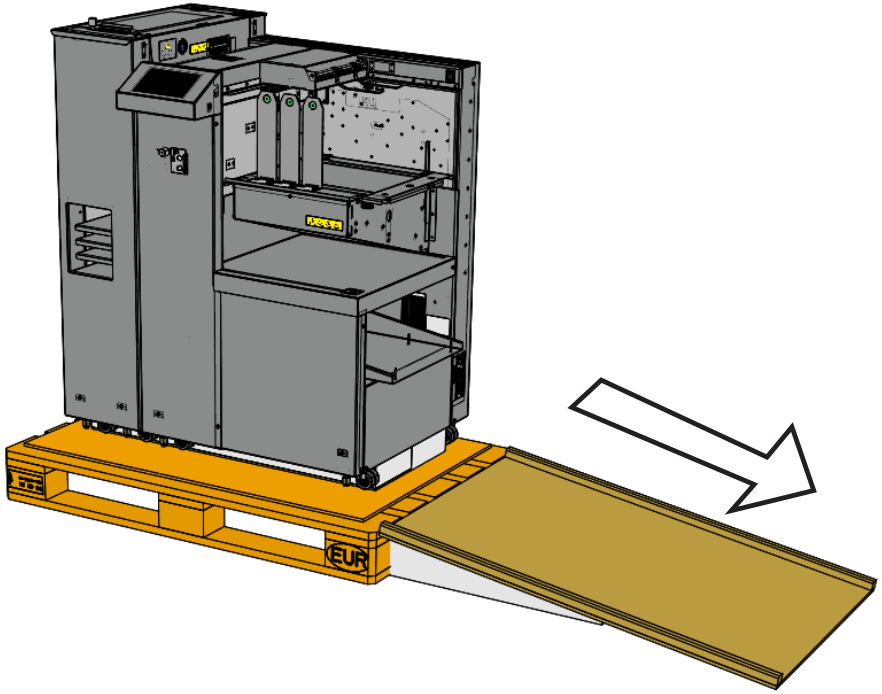

Page intentionally blank.

2.0 Installation Instruction

2.1 Minimum space requirements

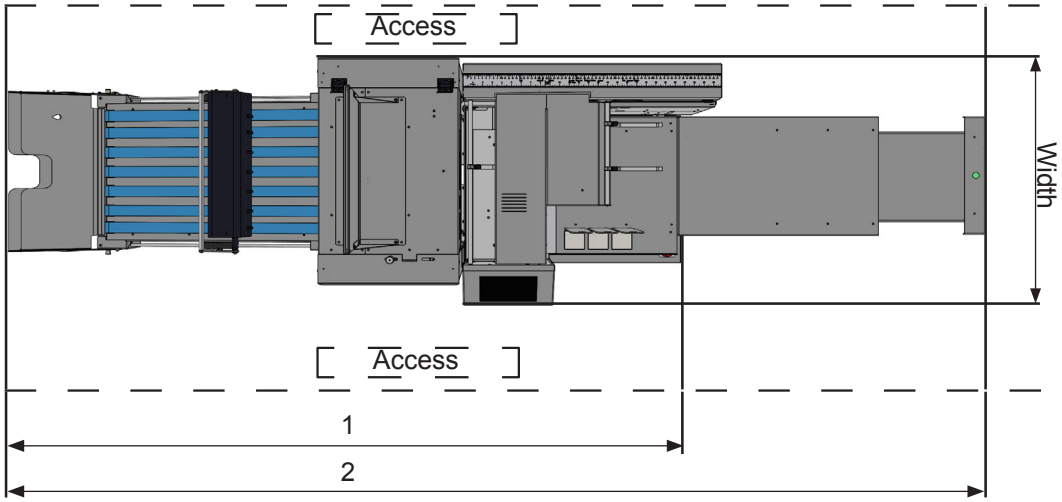

Actual Product Dimensions (For Reference)				
Position	Product	Length	Width	Height
Atlas C150				
1	Atlas C150	1690mm / 66.5”	730mm / 28.7”	1160mm / 45.7”
2	Atlas C150 with optional feeder table fully extended	2540mm / 100”	730mm / 28.7”	1160mm / 45.7”
Atlas C350				
1	Atlas C350	2130mm / 83.9”	730mm / 28.7”	1395mm/ 54.9”
2	Atlas C350 with feeder table fully extended	2990mm / 117.7”	730mm / 28.7”	1395mm/ 54.9”

2.2 Power requirements

⚠ **WARNING**

1. Make sure that the wall outlet is near the main machine and easily accessible. Make sure the plug is firmly inserted in the outlet.
2. Avoid multi-wiring.
3. Be sure to ground the machine.
4. Never place anything on the power cord.

Power supply	Voltage [V ac]	Current
Switched-mode	100 - 240V, 50/60Hz Tolerance -10/+6%	8 – 4A

Page intentionally blank.

2.3 Accessory check

Item	Qty	Description
Installation kit contents:		
1	1	Safety instruction
2	1	Atlas C150 Operator manual
		Atlas C350 Operator manual
3	1	Power cord kit
4	1	Fuse kit T12A
5	1	CAN termination plug
6	1	Digital thickness gauge
7	1	28T rotary perforation blade (7 TPI)
8	1	Rotary perforation / slitting anvil
9	8	Machine foot
10	1	Inch fraction chart
In feeder shelf:		
11	2	Multi-purpose wrench
12	1	Hex key set
13	1	Sensor cleaning brush
14	1	Roller cleaning brush
Under feeder front cover:		
15	1	Screwdriver Torx T20
16	1	USB memory stick for performing machine software updates
17	1	Calibration strip for ultrasonic double sheet detector
18	1	Interlock cheater

2.4 Levelling the machine

1. Place one machine foot [A] under each screw (8x).
2. Use the provided multi-tool or another 19 mm wrench to raise the machine off the floor. Check that the casters move freely and the machine does not rock.
3. Use a spirit level and adjust the feet until the machine is level.
4. Use both multi-tools or two 19 mm wrenches to lock off the machine feet [B].

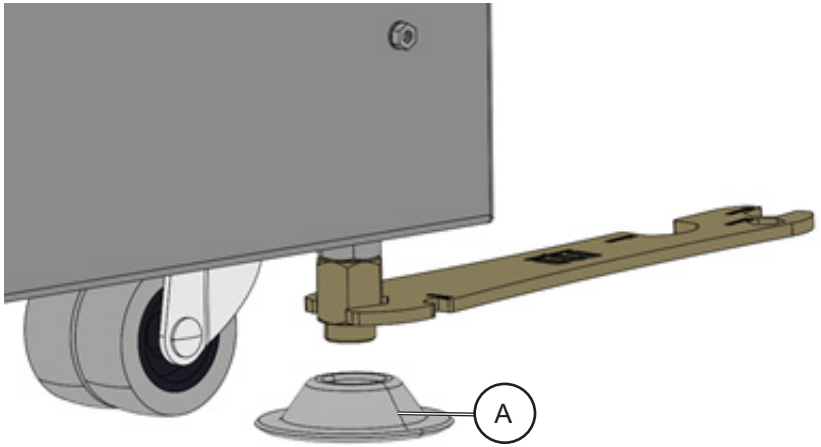

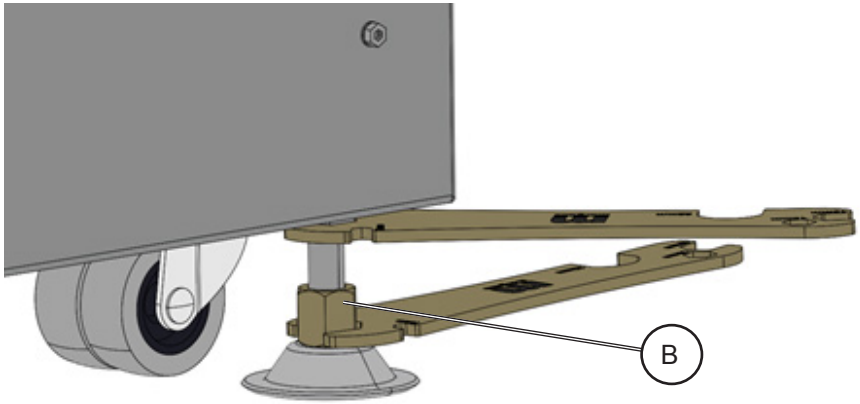

2.5 Tilt knob installation

1. If creaser tilt adjustment knob [A] is not installed, screw it in its socket as shown.

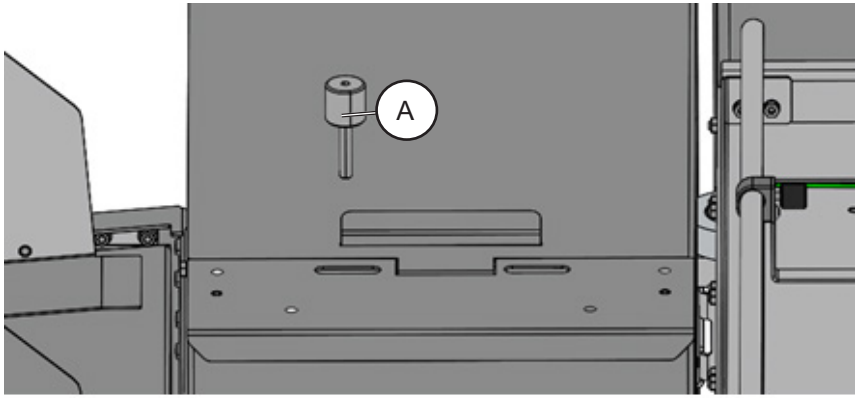

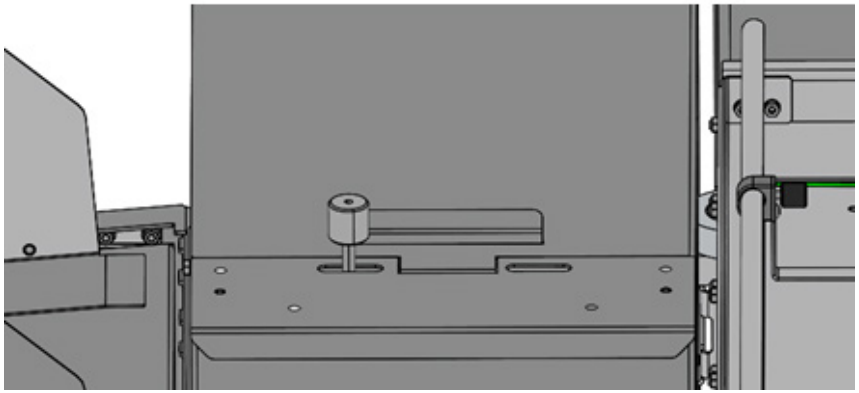

2.6 Stacker installation (Atlas C150 only)

1. Hook the stacker [A] on the stacker brace [B] as shown.

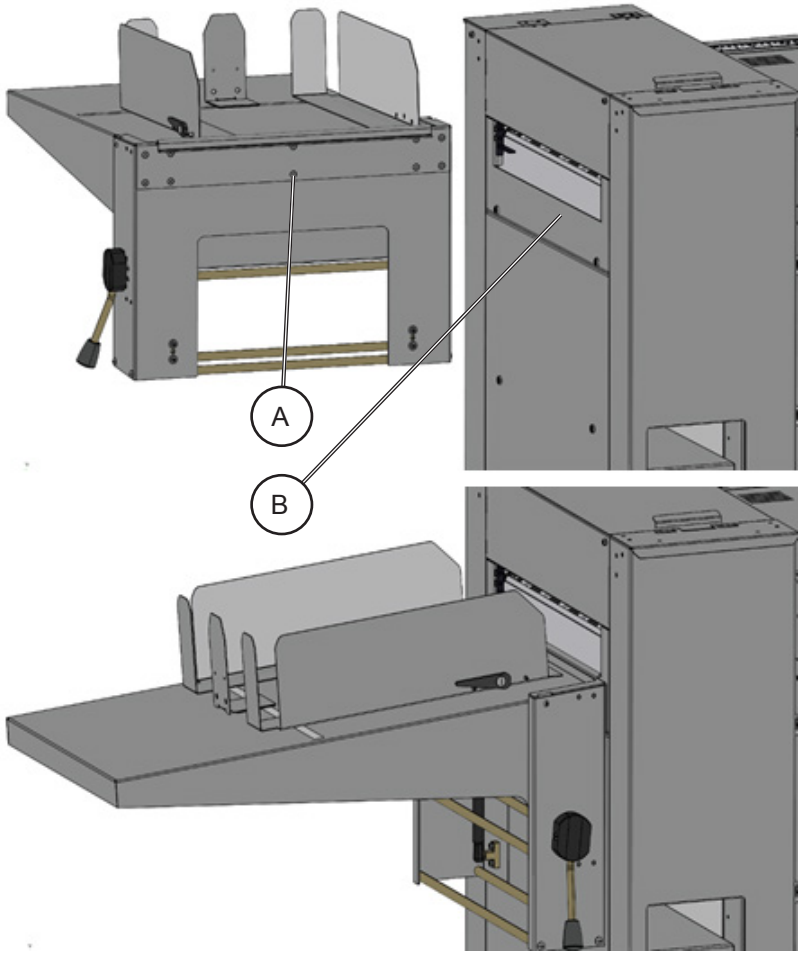

2.7 Stacker installation (Atlas C350 only)

⚠ **WARNING!**
After installation check the exit guide [J] does not touch the fold roller [K].

1. Open top cover and remove screws [A] to release exit guide [J].
2. Hook the conveyor [I] onto hooks [B].

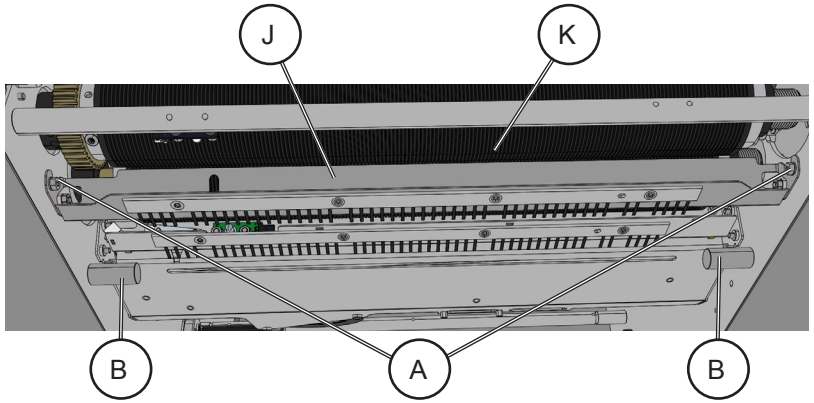

3. Remove screws [D] to open conveyor cover [C].

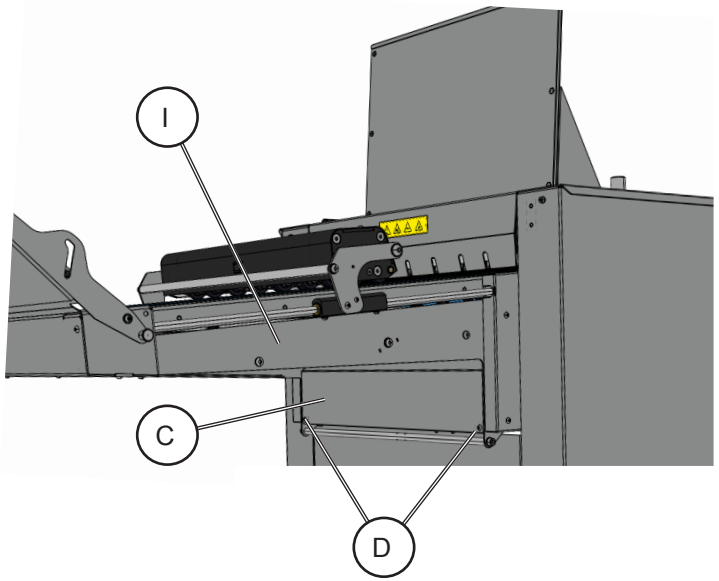

4. Insert two screws [E] into shaft [F] to secure the conveyor in place
5. Plug in two electrical connectors [G] from the conveyor into the machine

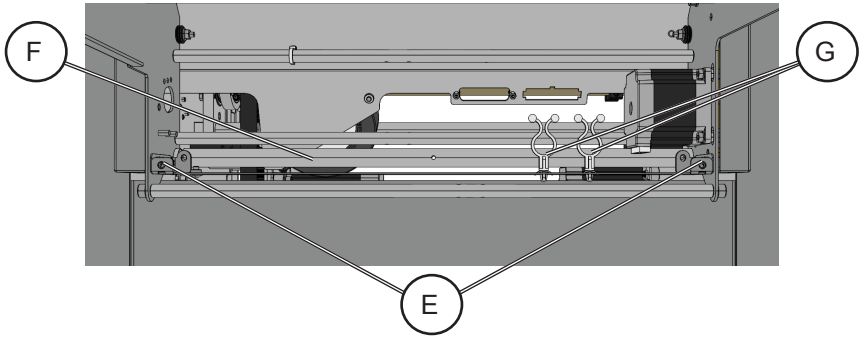

6. Close conveyor cover [C] and screw it shut [D].
7. Install catch tray [H] and support hoop [L] if not installing BST4000.
8. Reinstall exit guide [J].

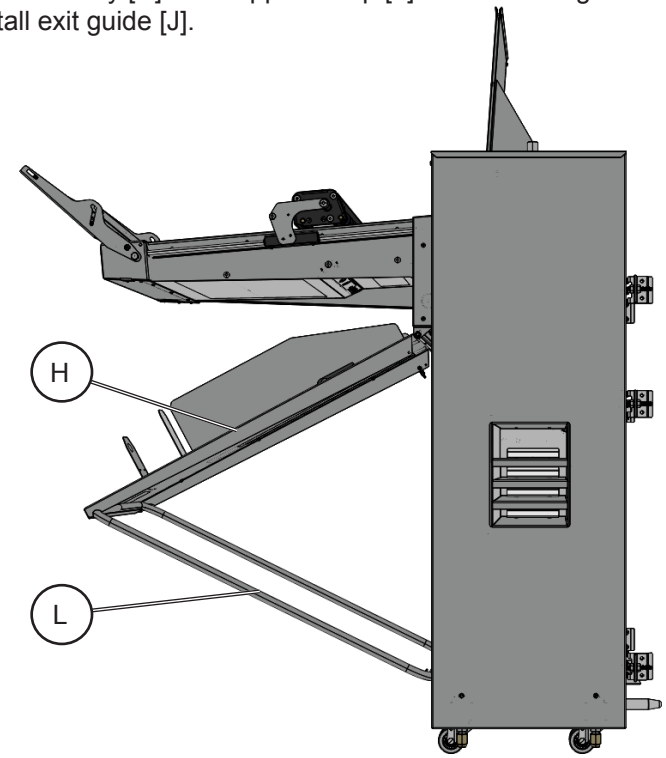

2.9 Top shoot installation (Atlas C350 only)

1. Open Atlas C350 top cover [A].
2. Locate top shoot screws [B] (x8) into DigiFold top cover.
3. Secure top shoot with nuts [C] (x8).

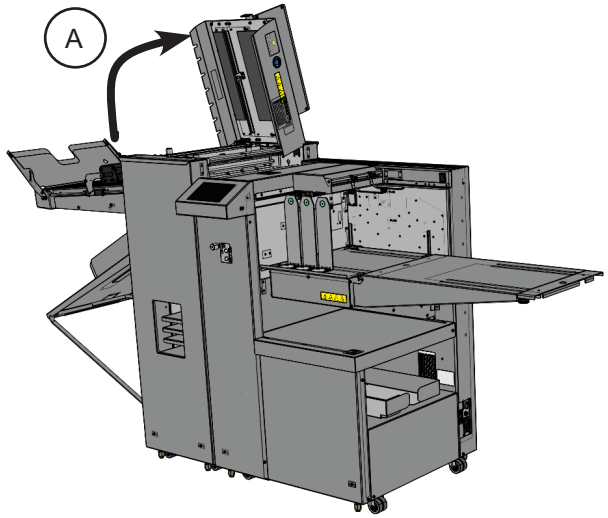

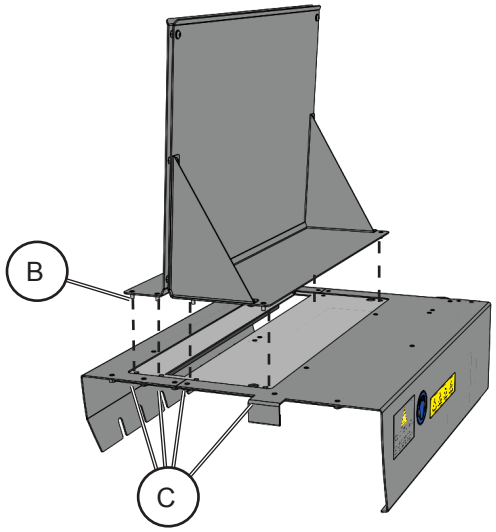

2.10 Feeder table extension installation (optional for Atlas C150, standard for Atlas C350)

Install table extension if using sheets longer than 700 mm / 27.6”

1. Attach paper support from the install kit to the pull-out part of the table extension using the included multi tool or another 7 mm wrench.

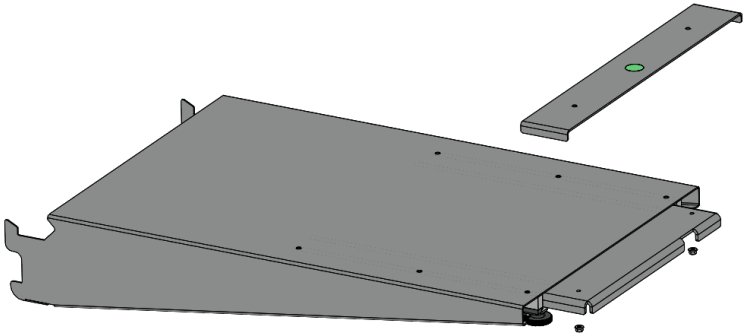

2. Ensure the built-in pull-out table [A] is fully stowed.

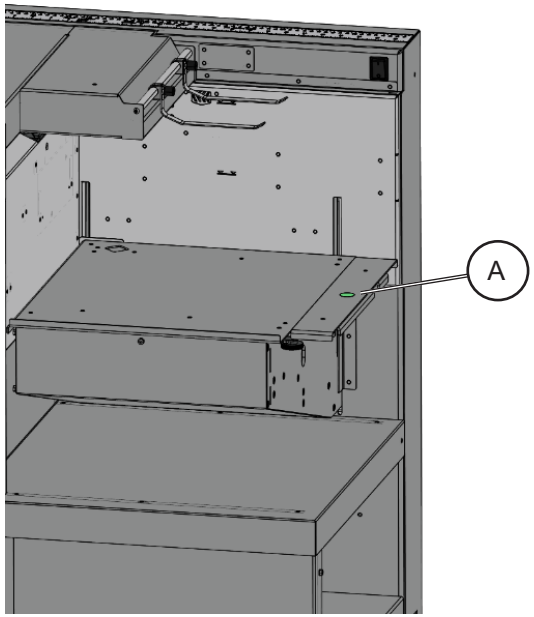

3. Hook the table extension [B] into the lift [C] as shown.

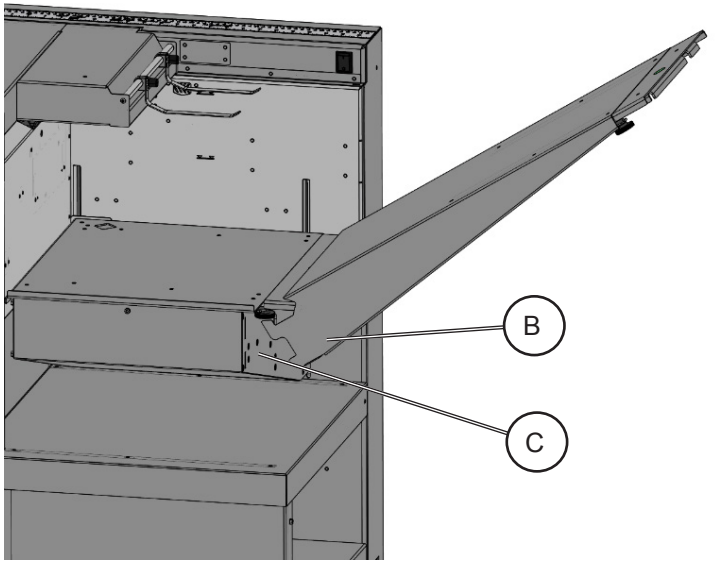

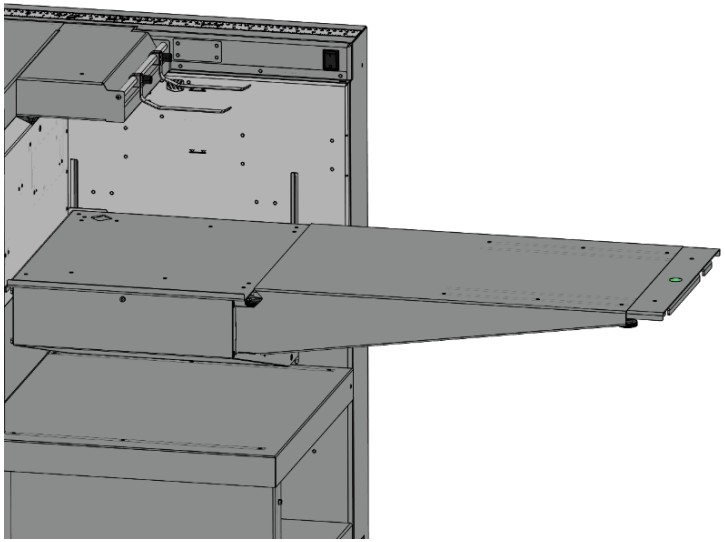

2.11 Fuse replacement (if required)

⚠ **WARNING**
Make sure the power cord is unplugged before replacing the fuse.

This machine is shipped with a T6.3A fuse installed. This fuse works in 140-240 V ac environments. If this machine is going to be used in a 100-140 V ac environment, the T6.3A fuse needs to be replaced with the T12A fuse shipped with the machine.

Procedure:
1. Unlock the fuse holder knob [A] with a flat-head screwdriver and remove the T6.3A fuse and its black holder.
2. Replace the fuse with the T12A fuse and its matching grey fuse holder. Lock the fuse holder in place.

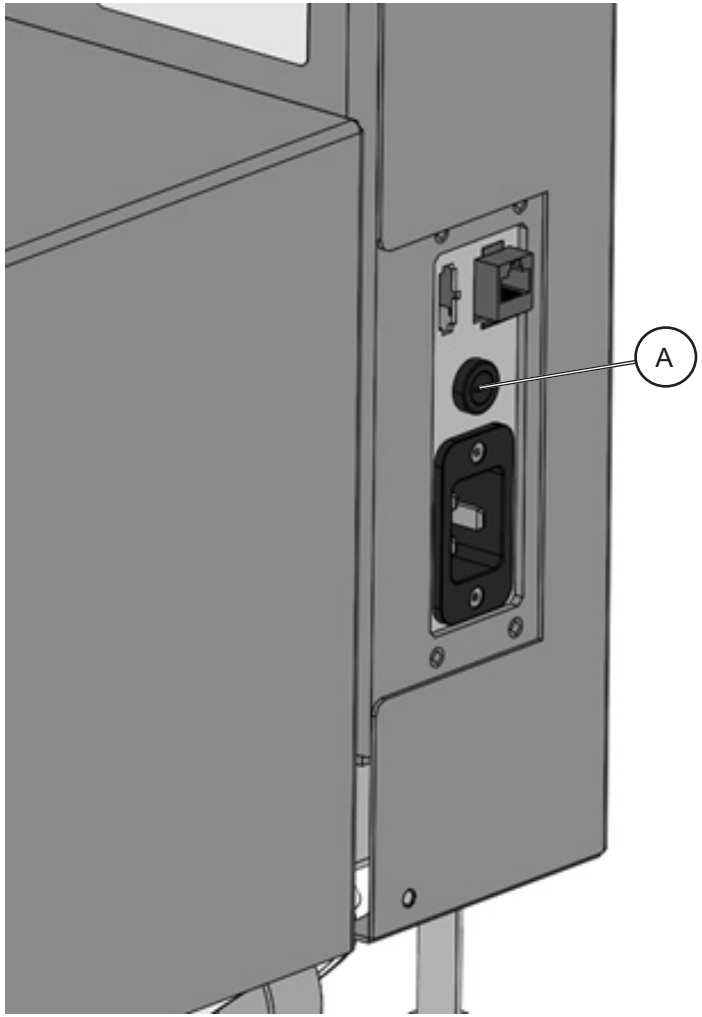

3.0 Power On and Calibration Check

3.1 Plug in and power on

⚠ **WARNING**
Do not plug in the machine with the wrong power cord.

1. Plug in the main power cord [A] between the machine and the wall socket.

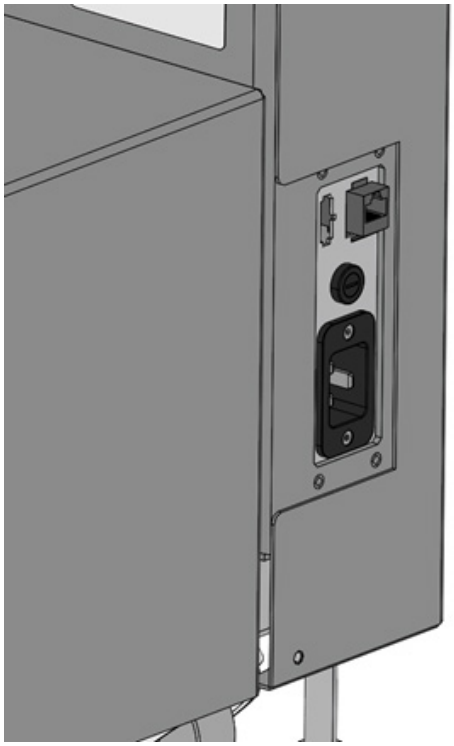

2. Plug in the CAN termination plug [B].
3. Turn on the main power switch [C].

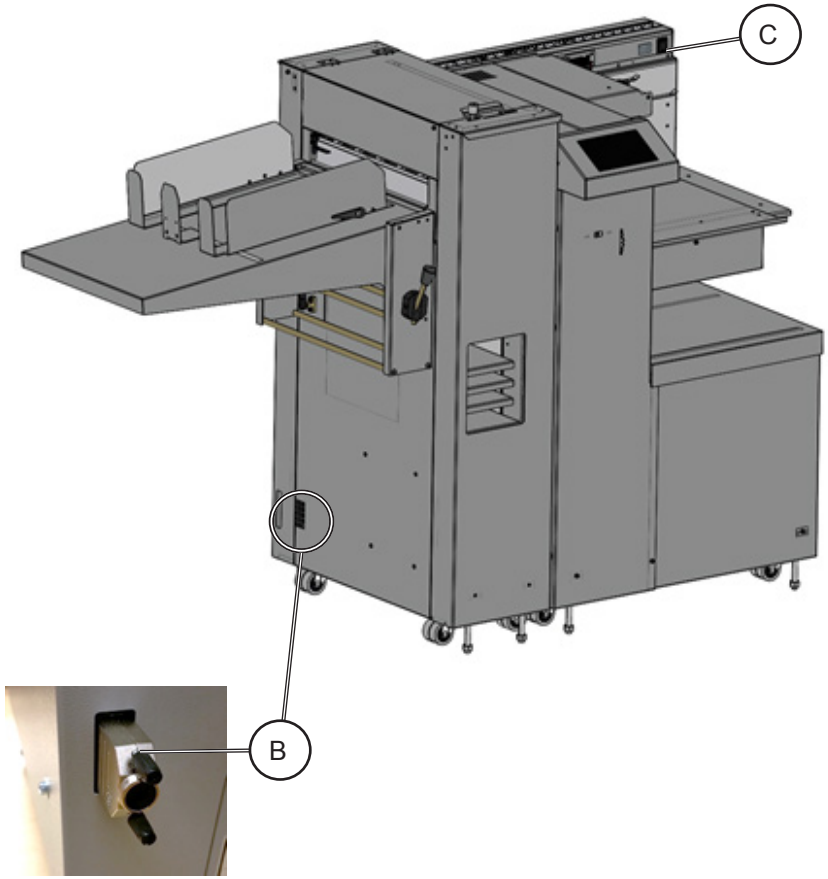

3.2 Module alignment check

To check that the machine has not lost its factory set alignment calibration during shipping and/or handling carry out the following procedure:

1. With the machine powered off open the top cover.

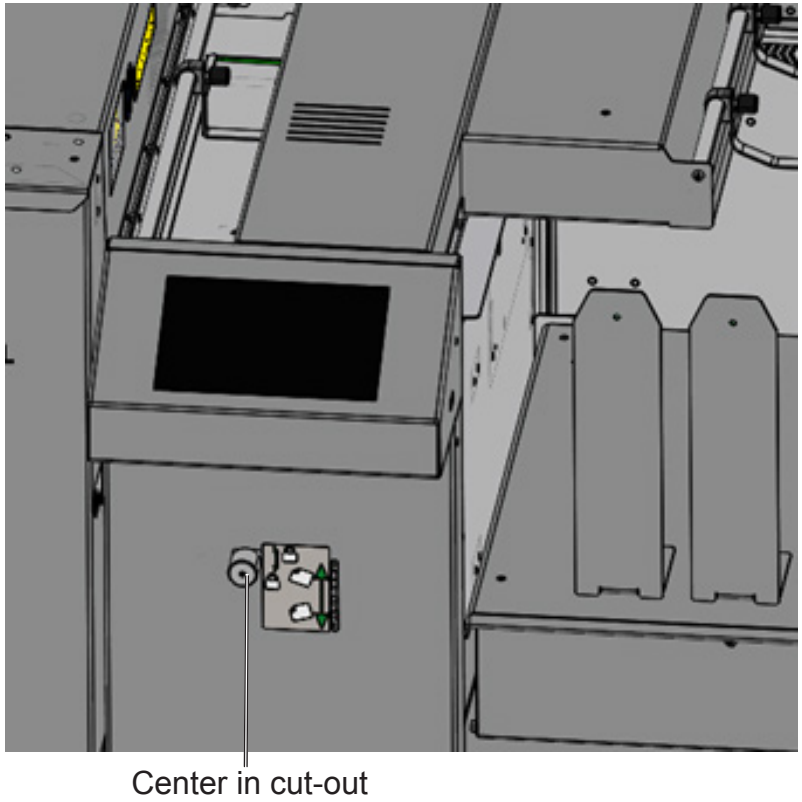

2. Take a stiff sheet of paper [A] and slide it against the registration wall [B].

   NOTE: Paper [A] must adhere to Paper Guidelines section of this manual.
3. Slide the sheet forwards until it comes in contact with creaser rollers. Check if both corners [C] of the sheet enter the rollers at the same time. Make sure that during this check the sheet remains parallel to the registration wall.

4. If sheet [A] does not enter the rollers at the same time refer to “4.1 Feeder alignment to AutoCreaser/DigiFold Pro XL”.

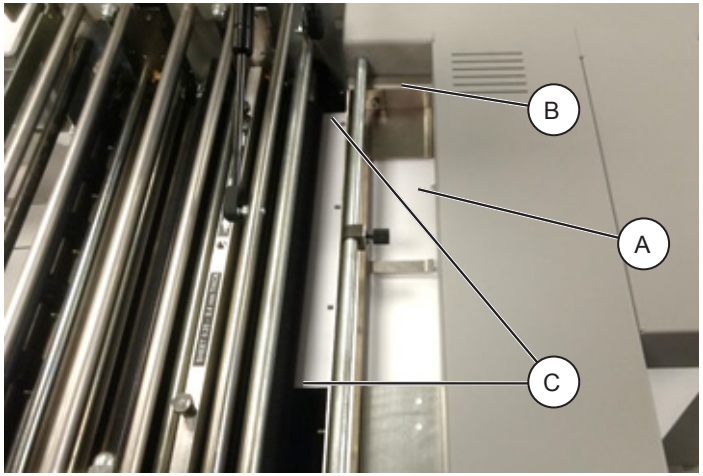

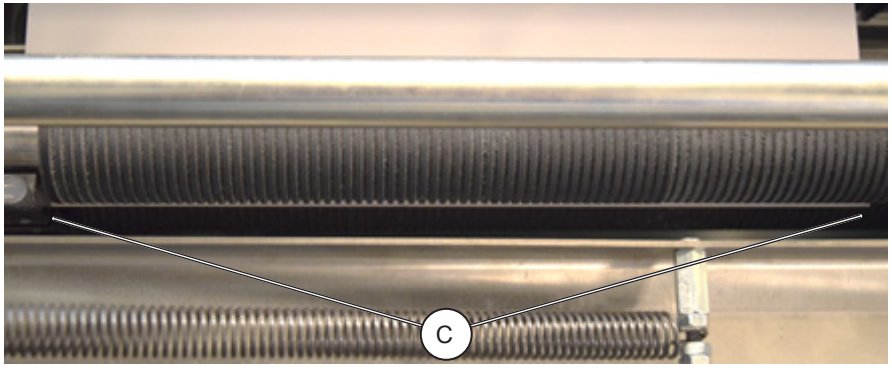

Continued on next page...

5. Close the top cover and power on the machine.
6. Run a proof sheet with a single crease and inspect the output.

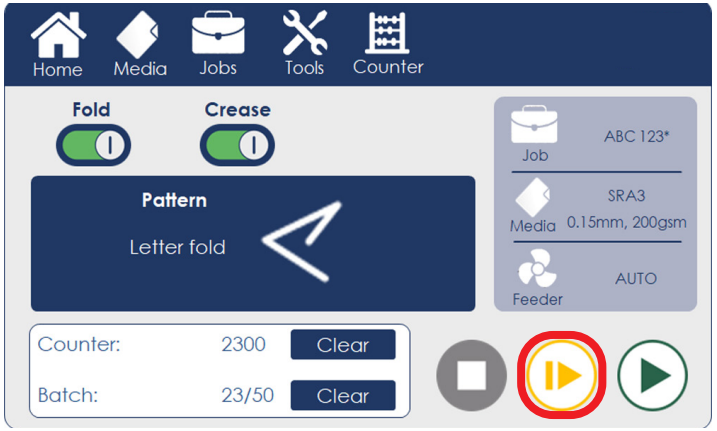

7. If the crease is skewed, adjustment is necessary.

NOTE:
Wrong crease positions are marked in red, correct crease position is marked in green.

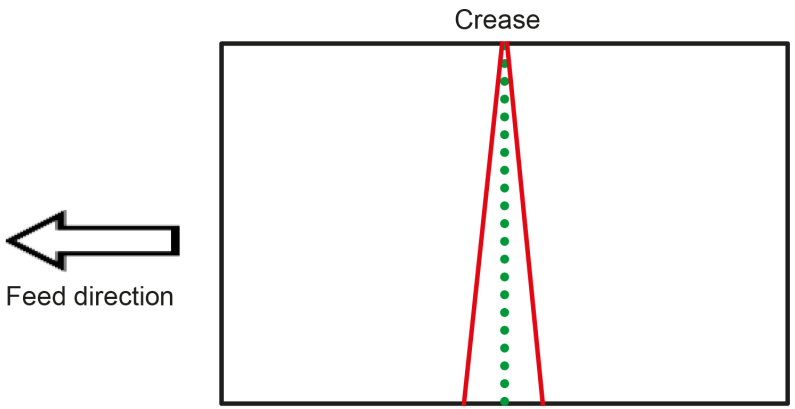

8. To adjust crease skew, loosen the crease adjustment knob by rotating it counterclockwise.

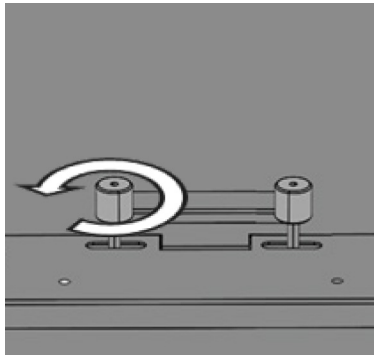

9. Move the knob slightly, either to the left or to the right depending on the direction of the crease skew.

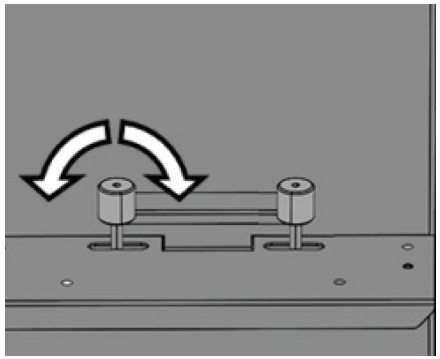

10. Rotate the knob clockwise to secure it.
11. Run another proof sheet to check if the crease is now perpendicular to sheet edge. Repeat steps 6 to 10 if necessary.

3.3 Creaser calibration check

To check that the machine has not lost its factory set crease calibration during shipping and/or handling carry out the following procedure:

1. Turn off Fold, run a proof sheet with a half fold pattern.

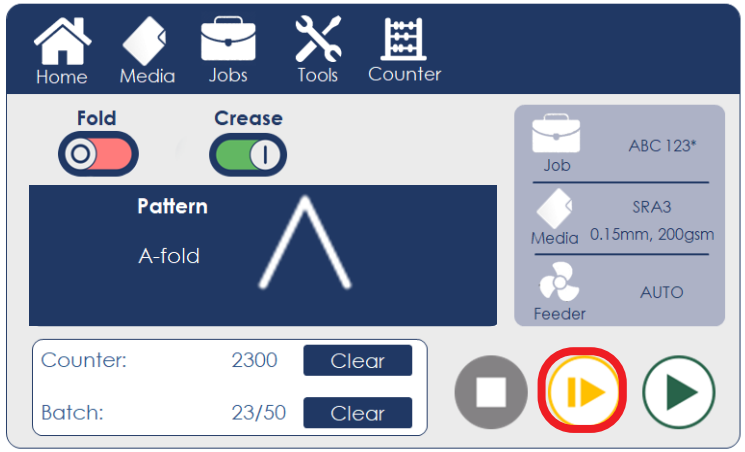

2. Measure the distance between the lead edge of the paper and the crease. The measurement should equal to the paper length divided by 2.

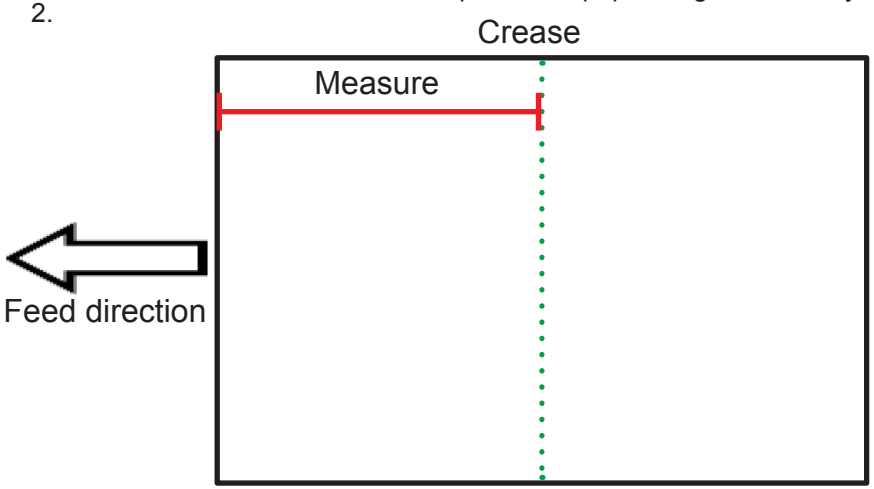

3. If the measurement is not within the machine tolerance (± 0.25 mm / ± 0.001”) continue to “4.2 Creaser calibration”.

3.4 Fold calibration check (DigiFold Pro XL only)

To check that the machine has not lost its factory set fold calibration during shipping and/or handling carry out the following procedure:

1. Turn off Crease, run a proof sheet with knife 1 half fold pattern.

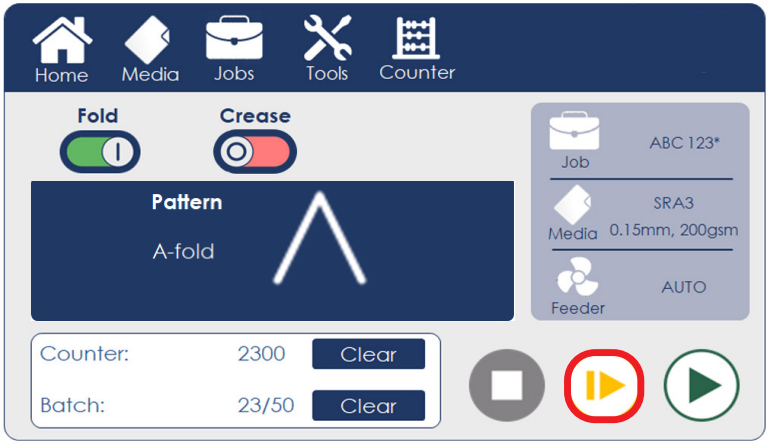

2. Measure the distance between the lead edge of the paper and the fold. The measurement should equal to the paper length divided by 2.
3. Repeat steps 1 & 2 with knife 2 half fold pattern.

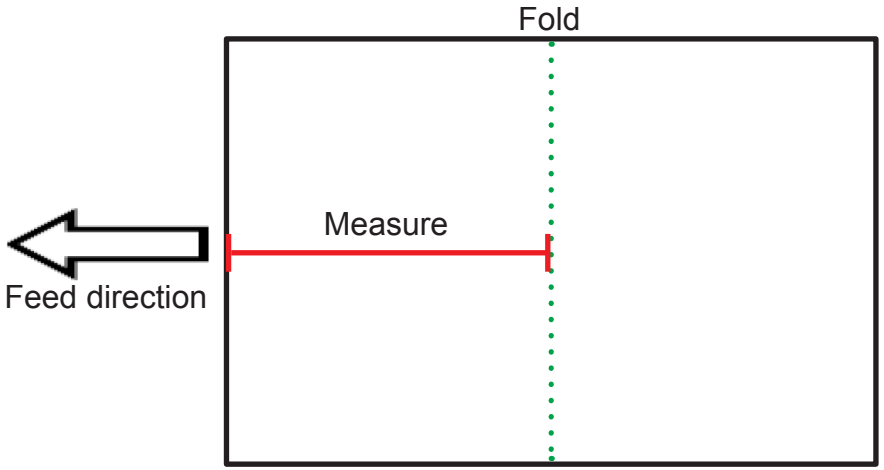

4. If the measurement is not within the machine tolerance (± 0.25 mm / ± 0.001”) continue to “4.3 Fold calibration”.

3.5 Checking for software updates

1. To check currently installed machine software version, go to Tools -> Software version
2. To check if there are software updates available for this machine go to Plockmatic Group website and log in to the Partner Centre (https://plockmaticgroup.com/customer-login/). Find the latest software download for this machine and compare version numbers.
3. If an update is available, follow “4.4 Updating software” or the technical bulletin supplied with the software.

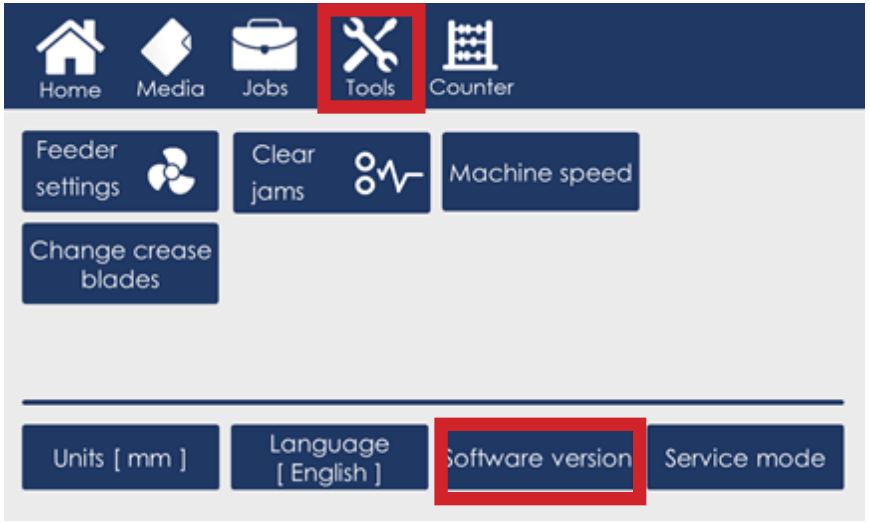

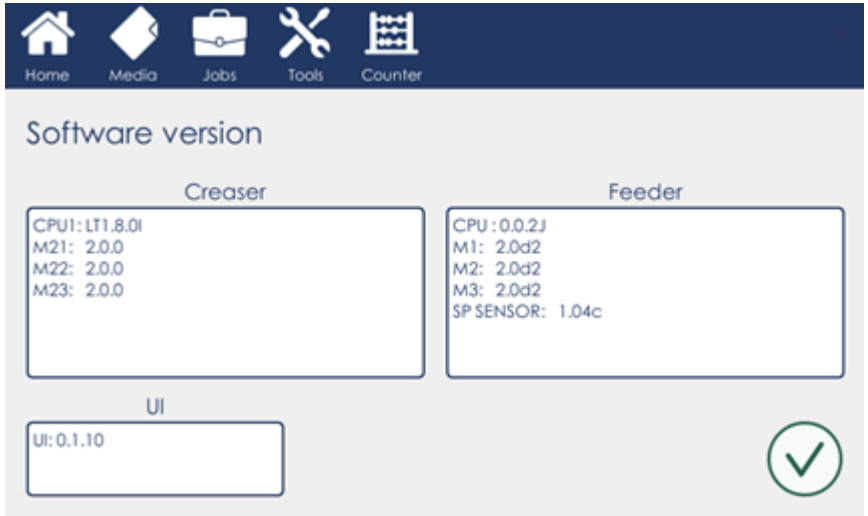

Page intentionally blank.

4.0 Calibration Procedures

4.1 Feeder alignment

Removing Atlas C150/C350 - Cover, Front

1. Turn off the power switch and disconnect the power cord.
2. Remove 2x screws [A] using a T20 screwdriver or a 7 mm wrench.
3. Remove tilt knob(s) [B] by rotating them counterclockwise.
4. Lift the front cover up and then out.

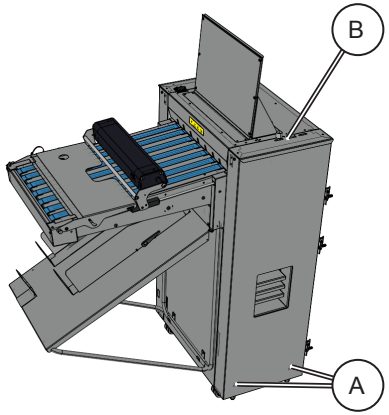

Removing Feeder – Front cover

5. To remove [C] unscrew skew adjustment locking knob [D] and use a 7 mm wrench or a T20 screwdriver to remove 3x bolts [E].

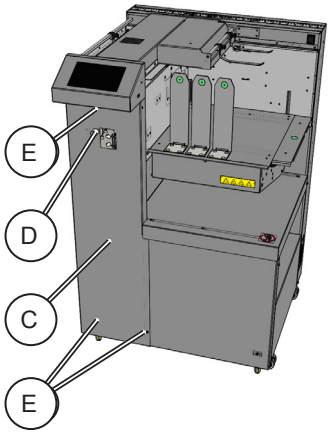

⚠ WARNING
Do not expose fingers or other parts of the body to moving, rotating or cutting devices when running the machine without the covers installed. Do not wear ties, lanyards or other things that might get trapped into the rollers and cause injuries.

6. Release nuts on brackets [G] using a 13 mm wrench.
7. Use bracket [H] to adjust angle between the modules. If the inboard (registered) corner of the sheet exits the rollers first, release nut [I] and tighten/loosen nut [J] to reduce the gap between the modules. If the outboard (operator side) corner of the sheet touches the rollers first, release nut [J] and tighten/loosen nut [I] to increase the gap between modules.
8. Lock off bracket [H] and brackets [G]. Run a proof sheet with a single crease. Check whether the sheets are “floating” in the creaser and whether the crease is skewed.
9. Repeat steps 7 & 8 until the modules are aligned.
10. Reinstall covers that were removed as part of this procedure, unless calibration of AutoCreaser/DigiFold Pro XL is required.

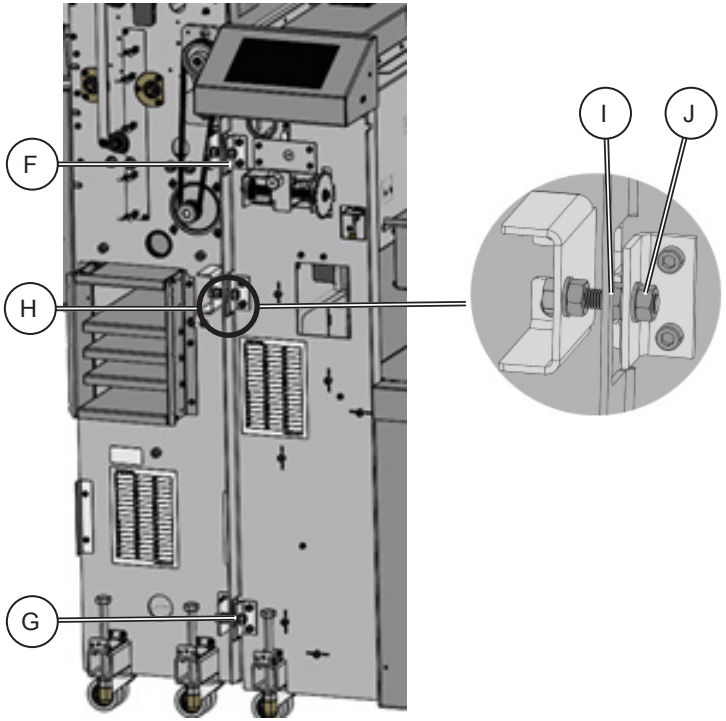

4.2 Creaser calibration

⚠ WARNING
Do not expose fingers or other parts of the body to moving, rotating or cutting devices when running the machine without the covers installed. Do not wear ties, lanyards or other things that might get trapped into the rollers and cause injuries.

1. Ensure feeder skew adjustment knob and creaser tilt knob are centered.
2. Load paper in the feeder. For best results use 200 – 250 gsm paper at least 450 mm in length (or longer).
3. Set up a half fold job and run a proof sheet.
4. Measure the distance between the lead edge of the paper and the crease at the registered side and at the operator side.

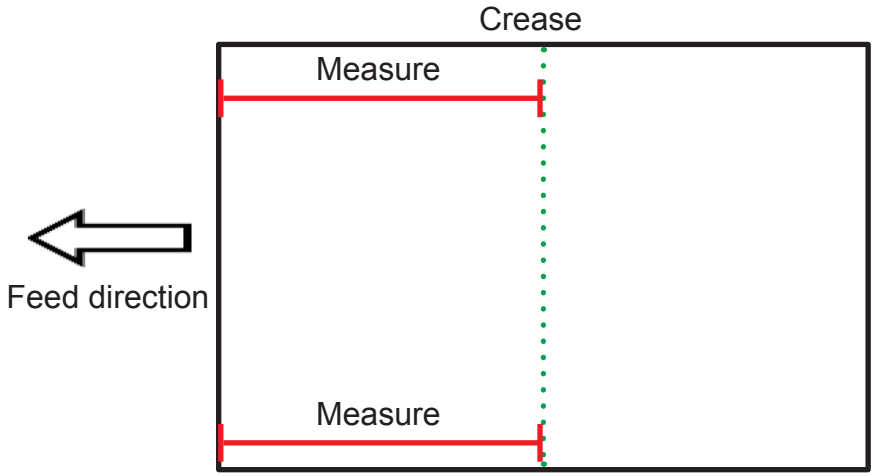

5. If crease skew (difference between registered side and operator side) is > 0.25 mm mechanical adjustment is necessary.
   To calibrate the position one creaser use a 6 mm hex key to loosen 4x screws [A].
   or
   To calibrate the position two creaser use a 6 mm hex key to loosen 4x screws [B].
   Shift the creaser support blocks forward or back to correct for the measured crease skew. Repeat steps 3.-5. until crease skew is < 0.25 mm.

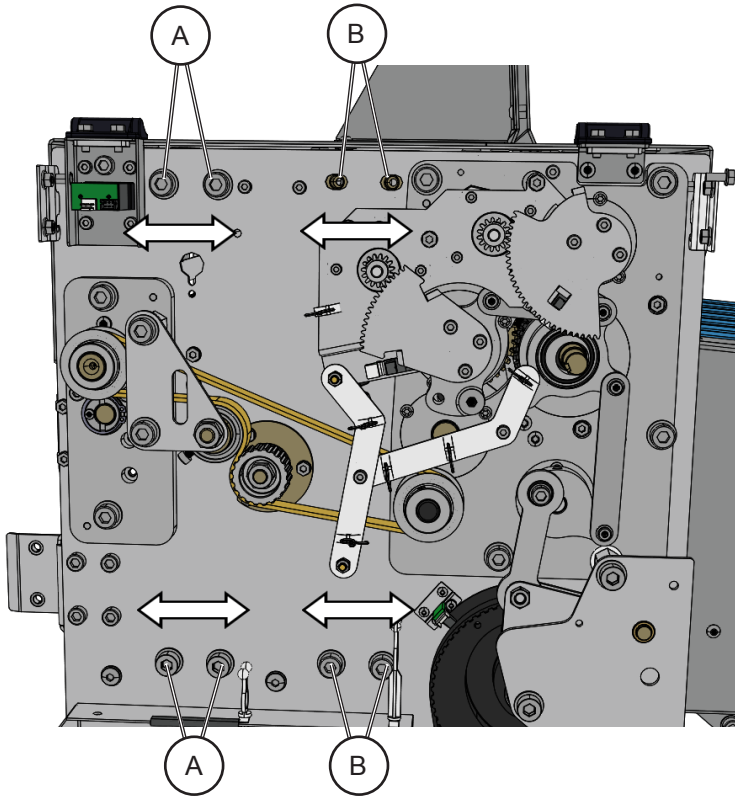

Continued on next page...

6. When crease skew is < 0.25 mm the creaser NVM values can be calibrated. Set up a custom job with a single crease at 50 mm and run a proof sheet.
7. Measure the distance between the lead edge of the paper and the crease. Calculate the error:

Position Error = Target Position - Measured Position

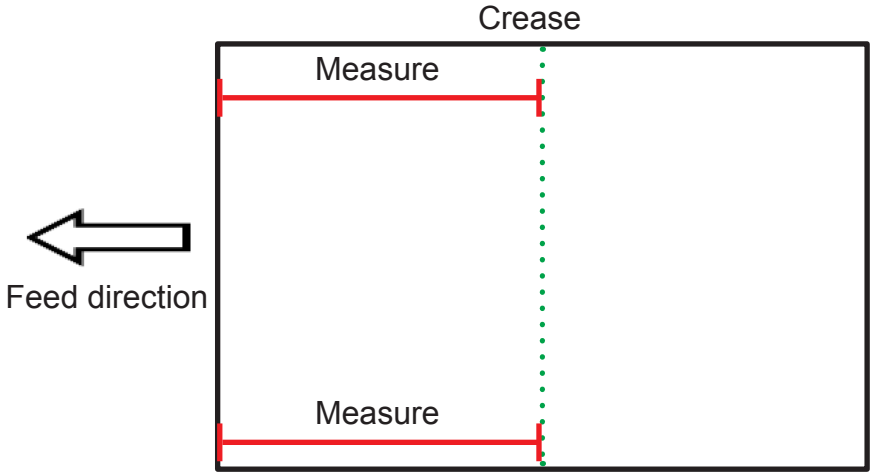

8. Increment the relevant distance NVM value by the error. To enter the NVM screen follow procedure “4.5 Updating NVM values”:
   - If the error is positive, increase the NVM. If the error is negative, decrease the NVM
   - The NVM is stored in units mm×10, so if the error is 0.5 mm change the NVM by 5 units.

   Atlas C150 “**Crease**”
   - Calibrating the first position creaser – NVM001 “Crease Tool 1 distance from Q20”
   - Calibrating the second position creaser – NVM002 “Crease Tool 2 distance from Q20”

   Atlas C350 “**Crease**”
   - Calibrating the first position creaser – NVM001 “Crease Tool 1 distance from Q40”
   - Calibrating the second position creaser – NVM002 “Crease Tool 2 distance from Q40”

NOTE:
Section 5.3 contains instructions on accessing and changing NVM values.

9. Exit Service mode and repeat steps 6.-7. If the error is within tolerance, proceed to step 10. If the error is out of tolerance, repeat step 8.
10. Repeat steps 10 & 11 until the crease position is within tolerance.
11. Reverse removal procedure for all covers that have been removed.

4.3 Fold calibration

⚠ WARNING
Do not expose fingers or other parts of the body to moving, rotating or cutting devices when running the machine without the covers installed. Do not wear ties, lanyards or other things that might get trapped into the rollers and cause injuries.

1. Set up a custom job with a single knife 1 fold at 100mm and run a proof sheet.
2. Measure the distance between the lead edge of the paper and the fold. Calculate the error:

Position Error = Target Position - Measured Position

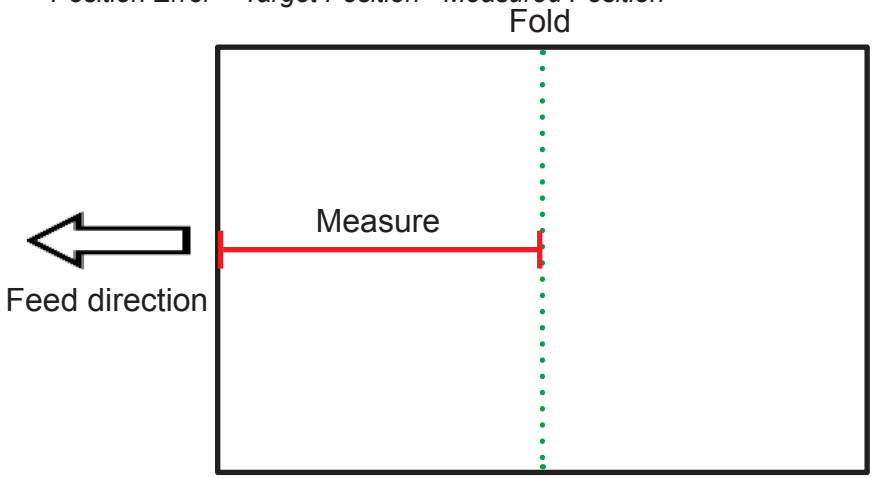

3. Increment the relevant distance NVM value by the error. To enter the NVM screen follow procedure “4.5 Updating NVM values”:
   - If the error is positive, increase the NVM. If the error is negative, decrease the NVM
   - The NVM is stored in units mm×10, so if the error is 0.5 mm change the NVM by 5 units.
   - Calibrating the fold knife 1 – NVM003 “Fold knife 1 distance from Q40”
   - Calibrating the fold knife 2 – NVM004 “Fold knife 2 distance from Q40”
4. Exit Service mode and repeat steps 1 & 2 If the error is within tolerance, proceed to step 5. If the error is out of tolerance, repeat step 3.
5. Set up a custom job with a single knife 1 fold at 400 mm (or more if the paper length allows it) and run a proof sheet.
6. Measure the distance between the lead edge of the paper and the Fold. If the error is within tolerance the calibration is complete. If it is out of tolerance, the relevant stretch NVM value must be updated:
   - Calibrating the position fold knife 1 – NVM005 “Stretch fold knife 1”
   - Calibrating the position fold knife 1 – NVM006 “Stretch fold knife 2”

$$\text{New Stretch Value} = \frac{\text{Target Position}}{\text{Measured Position}} \times \text{Old Stretch Value}$$

7. Repeat steps 5 & 6 until the crease position is within tolerance.
8. Repeat procedure for fold knife 2.
9. Reverse removal procedure for all covers that have been removed.

4.4 Updating software - single point download

Note:
If any PCB is replaced, you must first load it individually with a valid software. These instructions can be found in the technical bulletin supplied with the software. Single point download will only work for upgrades of system where all PCB's already have valid software of minimum launch version.

Procedure Single Point Download, Feeder/AutoCreaser/DigiFold system.
(Note! Feeder/AutoCreaser/DigiFold UI needs to be loaded separately)
1. Copy the file PRO_XL_MACHINE-x.x.x.rman" to the root folder of an USB stick.
2. Power off the machine [A].
3. Insert the USB stick in the USB port [B] on the right side of the user interface.

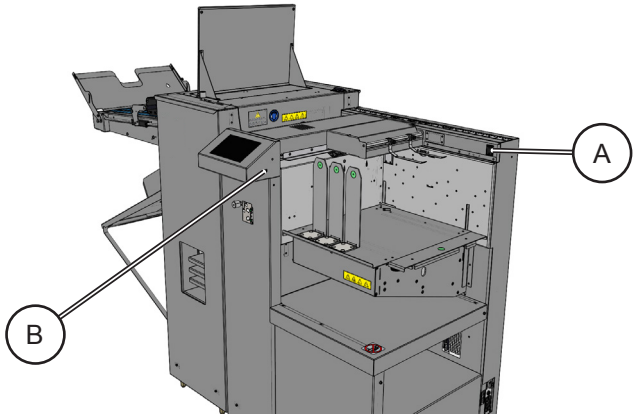

4. Power on the machine [A]. A list of files should now be shown.
5. Select the file "PRO_XL_MACHINE-x.x.x.rman" and press the Install button.
6. Press "Yes" in the dialog box that comes up.
7. Follow instructions on screen.
For further information refer to software technical bulletin.

4.5 Updating NVM values

1. Go to Tools [A] -> Service mode [B]
2. When prompted enter password 1974 and click the tick mark.
3. Use the Change Target button [C] to select the desired module. Currently selected module is displayed in the top left corner of the screen:
   - canid(10) – feeder module
   - canid(20) – creaser/folder module
4. Click the NVM button [D] to see a list of NVMs for the selected module.
5. Select and change the desired NVM value. For some NVM values the machine needs to be restarted for the change to take effect.

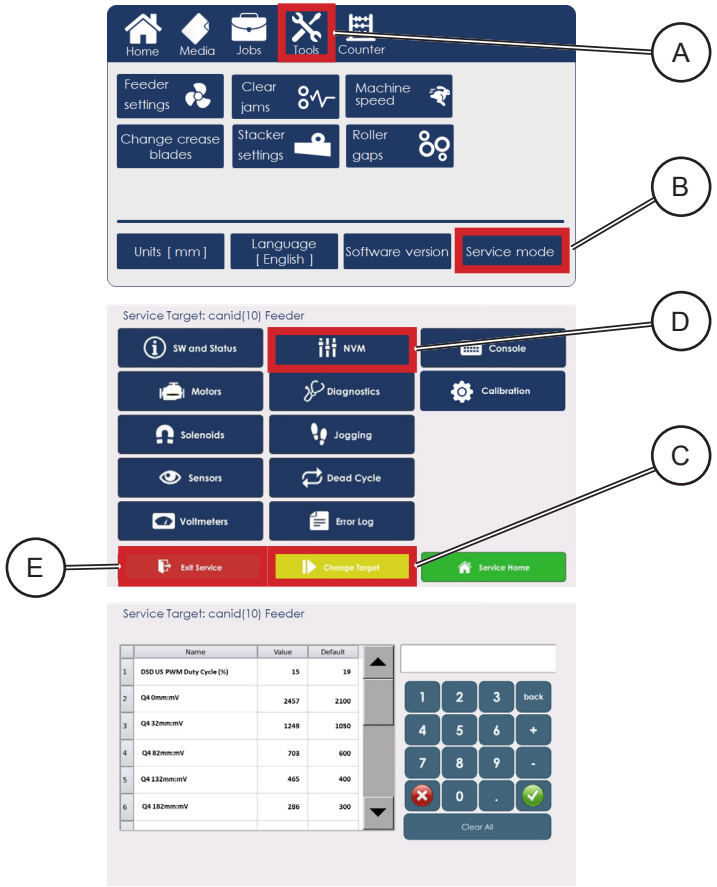

6. When finished use the Exit Service button [E] to return to the Home screen.